ISSN 2395-1621

Two Stroke Turbocharged S.I. Engine

#1Deepak Lonkar, #2Shashank Wable, #3Sagar Galande, #4Bhushan Shinde

1deepaklonkar94@gmail.com
2shashank7776@gmail.com
3 sagargalande1612@gmail.com
4bhushnde@gmail.com

#1,2,3Student, Final Year Mechanical Engineering, ISB&M School Of Technology, Pune, Maharashtra, India.
#4Assistant Professor, ISB&M School Of Technology, Pune, Maharashtra, India.

ABSTRACT

We have attempted to use of an exhaust gases coming out from the two stroke S.I. engine to increase the volumetric efficiency of two stroke S.I. engine. Turbocharger's objective is to improve the volumetric efficiency of two stroke S.I. engine by introducing to increase the density of an intake air. This density of air increases by increasing the pressure of an intake air of the two stroke S.I. engine, as the density increases the temperature also get increased. We use the intercooler for decreasing the temperature of this intake air. The intercooler here used by us is the specially designed intercooler by which intake air intercooling is increased in great extent, ours here one of the many attempts is to use the turbocharger and an intercooler in two stroke engine of two wheeler. We have also discussed problems related to turbocharger in an I.C. engine instead of C.I. engine.

Keywords- Two stroke S.I. engine, Turbocharger, Intercooler.

ARTICLE INFO

Article History

Received: 28th February 2016

Received in revised form :

1st March 2016

Accepted: 3rd March 2016

Published online :

5th March 2016

I. INTRODUCTION

A turbocharger is a type of compressor and has a turbine linked by a shared axle so if the compressor rotates, the also turbine also rotates. The exhaust gas from the engine enters in turbine inlet causing it to rotate. This rotation in turn drives the compressor, the intake manifold which receives compressed ambient air and delivers it to of an engine at higher pressure, greater amount of air entering the cylinder. The power of an engine can be increased by two ways. One of the ways is to make the fuel-air mixture richer by addition of more fuel. The fuel efficiency will decrease and increase the power increase in pollution levels prohibitive. The other would be to somehow increasing the fuel intake proportionately with increase the volume of air entering into the cylinder, fuel efficiency and increasing power without hurting the environment or efficiency. Increasing the volumetric efficiency of an engine in a naturally aspirated engine is done by turbochargers. If we can make more air enter into the cylinder we can increase the pressure difference across the intake valves by and hence increasing the volumetric efficiency of the engine. A turbocharger does this work, it increasing the pressure difference across the intake valves and thus more air enters into the combustion chamber thus increases the pressure at the point where air is entering the cylinder. The increasing the power and torque output of the engine is possible by additional air makes it possible to add more fuel, particularly at higher engine speeds. The fuel pre-ignite due to the pressure in the cylinder goes too high (more temperature = remember more pressure) causing serious physical damage to the engine.

II. LITERATURE REVIEW

[1]MohdMuqeem, In Gasoline and diesel engines both this engines that use superchargers and turbochargers face their own unique problems with intake air temperature. Turbochargers and Superchargers significantly heat the intake air as they compress it to create boost. The air density increases due higher boost pressure, but the increased temperature of the air can largely affect this density gain. It is the compressed air is to be cool before it enters the engine. In most cases intercooler cools the compressed, the cooling increases the air density more than any density losses that occur due to the accompanying pressure drop due to or flow restrictions through an intercooler. In other words, inter cooling results increase for the air entering the cylinder.Other benefits are also provided by Intercooling. For turbocharged or supercharged gasoline engines,

suppresses detonation occurs due to reduced intake air temperature, as it does for normally-aspirated gasoline engines. Intercooling increases charge density for diesel engines. From the above collected data and calculations they have concluded following , it is being concluded that when the hot air before entering into the engine cylinder is normal cooled using air intercooler to cool down, the mass of oxygen the engine becomes 1.43 times being fed to but when refrigerated it becomes 2.618 times intercooler is used. The ability to control exhaust emissions, increasing the oxygen content with the air leads to faster burn rates. More potential for burning diesel caused due to added oxygen in the combustion air offers.

[2]Mohammad Israr, AmitTiwari, MahendraLabana, AnshuGangele

The power in two wheelers can be enhanced by the use of turbo charging. An increase in 20% + more power can produce by a properly tuned turbo engine compared to stock engine, but increase in fuel consumption is expected. As compared to the same size naturally aspirated engine more power is produced. Thermal efficiency better over naturally aspirated engine and supercharged engine. Because of use of engine exhaust to do the useful work which is wasted otherwise. They conclude that along with decrease in pollution the efficiency as well as power is increasing 10 to 15 %. They also conclude that when the engine speed is 4000 rpm the full throttle valve is open at that time the turbocharger generate 1.60 bar pressurized air. Generally the atmospheric pressurized air is taken to the carburettor in a naturally aspirated engine for air fuel mixture but air of the high density can be added for the combustion, so efficiency is increasing as the power and the complete combustion take place.

[3] P Balashanmugam, E Elakiya and Sunayana Sharma

They have fabricated and designed a prototype of the Turbocharger which was implemented in two-wheeler, the efficiency of the Engine was increased .Thus they have developed a method. To control the Emissions and increase the efficiency of the engine at the same time. This modified type of engine will be more efficient than existing engines. They concluded the benefits of turbocharging as:

• 50% increase engine power output

• Improved fuel consumption by improving pressure balance across the engine

• A very high percentage of two wheel gasoline vehicles (48%) were found not complying with the prescribed National Emission Standards. The increase in Carbon monoxide and Hydrocarbon emissions by two wheel gasoline engines at accelerated engine speed was quite significant.

• Hydrocarbon emission was within 2000 ppm of about 90% of scooters and 85% of motor bikes About 33% of scooters and 83% of motor bikes were found emitting were found emitting CO within the prescribed national standard of 4.5%.

• During half throttling about 93% of motor bikes and 90% of scooters were found emitting HC 2000 PPM which was within the prescribed national standard of.

• During full throttling about 47% of motor bikes and 52% of scooters were found emitting HC not within the prescribed national standard of 2000 PPM.

• Two wheelers the power can be enhanced by the use of turbo charging in. A properly tuned turbo engine can produce 20% + more power compared to stock, but in an expense of an increase in fuel consumption.

• Better thermal efficiency of supercharged engine over naturally aspirated engine because the engine exhaust is being used to do the useful work which otherwise would have been wasted.

[4]TheodosiosKorakianitis, T. Sadoi

The overall tested steady-flow off-design-point and design-point thermodynamic cycle and engine performance with the three turbochargers namely MT-9, MT-13, MT-15.Where the mass-flow rates are MT-9= 0.06 kg/s, MT-13=0.075 kg/s, MT-15=0.118 kg/s. At wide-open throttle compressor MT-13 has the best efficiency. With MT-9 maximum efficiency occurs at lower mass-flow rates wide-open throttle, operation is to the right of the maximum efficiency point. With MT-15 maximum efficiency occurs at higher mass-flow rates, operation at wide-open throttle is to the left of the maximum efficiency point. Therefore, the best compressor for maximum acceleration is MT-13. For different types of operation different turbochargers are advantageous to an engine. The performance of a turbocharger is determined by the turbine specification and combination of compressor, the compressor and the turbine is not as sensitive to engine.

[5]Stanislav V. Bohac, Eric Feiler, Ian Bradbury

This study presents characterization of an EMD engine fitted with an early-development Tier0 emissions is a detailed exhaust emission kit. To provide insight into engine operation and the mechanisms of pollutant like NOx, PM, SOF, and SOF composition are measured at various loads its formation and identify areas of potential future engine emissions improvement.

For the engine hardware, emissions analysis procedures and sampling described herein, the early-development further improvements appear possible in Tier 0 emissions kit is successful in meeting Tier 0 emissions. Brake specific NOx emissions decrease with notch position at higher notch positions because combustion phasing is modestly retarded. Brake specific PM emissions are lowest, probably injector spray are optimized for and because the combustion chamber notch 8 SOF increases with notch position from 14% at notch 3 to 32% at notch 8. The added benefit is also improving fuel consumption. Some effect on reducing PM at all notches also reduces engine oil consumption.

[6]Peng Shan, Yicheng Zhou, Dexuan Zhu

To design and analyze the aerial two-stage turbocharging CI engine propeller propulsion system a characteristic simulation method of component level used in gas turbine engine is introduced. The component performance maps and algebraic equations are used to set up the component models. The studies show (1) to solve the joint-working equations uses Newton method. After 5–6 iterations of this simulation method obtains converges fast that usually the system operating point. (2) A numerical example is available. To allow an effective adjusting to the operating points of the turbochargers, the regulation scheme of two gas-bypass valves cannot only meet the design objectives. In the overall altitude–velocity range a power mismatching area of CI engine and propeller may be found.

III.DESCRIPTION OF PROJECT

Air fuel mixture is mixed inside the turbocharger before it enters to the inlet of the engine and it is done so by using the arrangement we have done in this project. And to avoid the back fire inside the engine, intercooler must be there which helps us to reduce the backfire sound inside the engine. This

backfire sound is quite dangerous for the air fuel mixture inside the engine hence it is most important to avoid this backfire sound.

IV. COMPONENTS OF THE PROJECT

1. *Engine:*
   Here for performing the project work we use the SUZUKI's old 100cc petrol engine.

2. *Turbocharger:*
   We designed the specially assisted turbocharger for the project for mounting it as a key component of the project for that we modified the silencer of the bike in the manner which takes the exhaust gases from engine and supplies these gases to the turbocharger.

3. *Intercooler:*
   We also designed the intercooler for the project as intercooler helps to reduce the backfire of the engine it is very important parameter of our project.

V. FIGURE

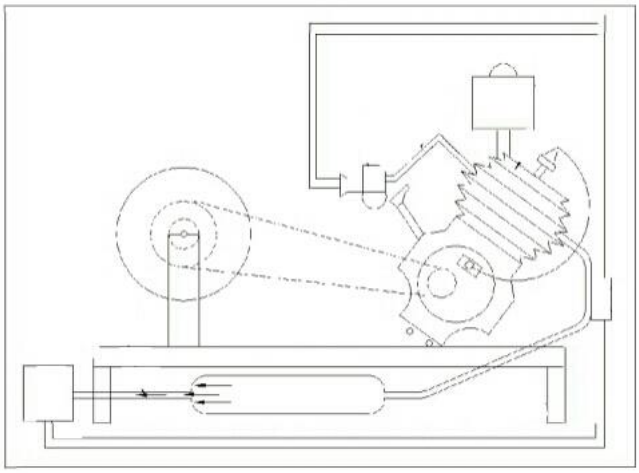

Fig1. Layout of turbocharged engine assembly

VI. WORKING OF THE PROJECT

Turbocharger containing a small radial fan for the exhaust gases of an engine. Exhaust gases coming out from the engine are firstly enters inside this turbocharger where these gases get heated as the turbocharger is also works as a heat engine too. So to avoid the dangerous effects caused due to these highly heated gases we passed these gases through an intercooler before introducing them to the inlet manifold of an engine. It helps to compress the inlet air into the engine more easily. Now this turbocharged air and the fuel from fuel tank can burn more easily than that of regular air and as this efficiency of an engine can get increased up to 20%.

VII. EXPECTED RESULTS

Our project is about to make an impressing work in the automobile industry. As the turbocharger is expected to enhance the power more than 20% if engine is properly tuned. We willtry to conclude after performing the project on two stroke turbocharged S.I. engine that the efficiency and the power will increase by 10 to 15%. We will also conclude that when intercooler is used for air which is going to be supplied to the engine it helps to burn the fuel in faster rate. Hence overall we will try toconclude that it is possible to increase the engine's power even after not increasing the size of the engine, by using the turbocharger and intercooler in two stroke S.I. engine.

ACKNOWLEDGEMENT

The fabrication work of the project was carried out in Kajal Fabricators, Pune, Maharashtra, India, with the co-operation of owner of the shop Mr.GorakhShinde.

REFRENCES

[1]MohdMuqeem, "Turbocharging With Air Conditioner Assisted Intercooler", IOSR Journal of Mechanical and Civil Engineering (IOSRJMCE) ISSN : 2278-1684 Volume 2, Issue 3 (Sep-Oct 2012)

[2] Mohammad Israr1, Amit Tiwari2, Mahendra Labana3 and Anshul Gangele4, "Performance Analysis and Fabrication on a Turbocharger in Two Stroke Single Cylinder Petrol Engine", IJETI International Journal of Engineering & Technology Innovations, Vol. 2 Issue 2, March 2015 ISSN (Online): 2348-0866

[3] P.Jeevanandha1, M.GaneshPrashanth, M.Rajesh, S.santhos and M.Satishkumar, "Modifications of two stroke engine to increase the torque", International Journal of Reasearch in Aeronautical and Mechanical Engineering, ISSN (Onile): 2321-3051

[4]TheodosiosKorakianitis 1, T. Sadoi 2 "Turbocharger-Design Effects onGasoline-Engine Performance"ASME 2015

[5]Stanislav V. Bohac, Eric Feiler, Ian Bradbury "Exhaust EmissionsCharacterization of aTurbocharged 2-Stroke Tier 01Locomotive Engine: NOx,Particulate Matter and Soluble Organic Fraction Composition" ASME 2015

[6]Peng Shan, Yicheng Zhou, Dexuan Zhu" Mathematical Model ofTwo-Stage TurbochargingGasoline Engine PropellerPropulsion System and Analysisof Its Flying Characteristic" ASME 2015

[7]A.Srinivas, G.Venkatasubbaiah, P.Venkateswarrao& M. Penchal Reddy, " Some Innovations in Design of Low Cost Vaariable Compression Ratio Two Stroke Petrol Engine", SAE 2009

[8] GONG Hao and WANG Zhan-xue, "Effects of Intercooling and Recuperation on Turbofan Engine Performance", International Conference on Electronic & Mechanical Engineering and Information Technology, 2011

[9] Heywood, J. B., 1988, Internal Combustion Engine Fundamentals, McGraw-Hill, New York.

[10]Horlock, J. H., and Winterbone, D. E., 1982, The Thermodynamics and GasDynamics of Internal Combustion Engines, Clarendon, Oxford, UK, Vol. 1.

[11] Horlock, J. H., and Winterbone, D. E., 1986, The Thermodynamics and GasDynamics of Internal Combustion Engines, Clarendon, Oxford, UK, Vol. 2.

[12] Watson, N., and Janota, M. S., 1982, Turbocharging the Internal CombustionEngine, MacMillan, New York.

[13] Bents, D. J., Mockler, T., and Maldonado, J., 1996, "Propulsion Selection for85kft Remotely Piloted Atmospheric Science Aircraft," NASA Lewis ResearchCenter, Cleveland, OH, Report No. TM-107302.

[14] Wilkinson, R. E., and Benway, R. B., 1991, "Liquid Cooled Turbocharged PropulsionSystem for Hale Application," ASME Paper No. 91-GT-399.

[15] Harp, J., 1982, "Turbocharger System Development and Propulsion SystemTesting," prepared for Developmental Sciences Inc. under Contract No. DSI-80-TRSC-05-A, ThermoMechanical Systems, Canoga Park CA (declassifiedMar. 1994).

[16] Tonskotter, H., and Scheithauer, D., 1995, "The Strato 2C Propulsion System—ANew Compound Engine and Control Concept for High Altitude Flying," AGARDPEP Symposium, Seattle, WA, Sept. 25–29, AGARD CP-572, Paper No. 6.

[17] Bents, D. J., Mockler, T., Maldonado, J., Harp, James, L., King, J. F., andSchmitz, P. C., 1998, "Propulsion System for Very High Altitude SubsonicUnmanned Aircraft," NASA Lewis Research Center, Cleveland, OH, ReportNo. TM 1998-206636.

